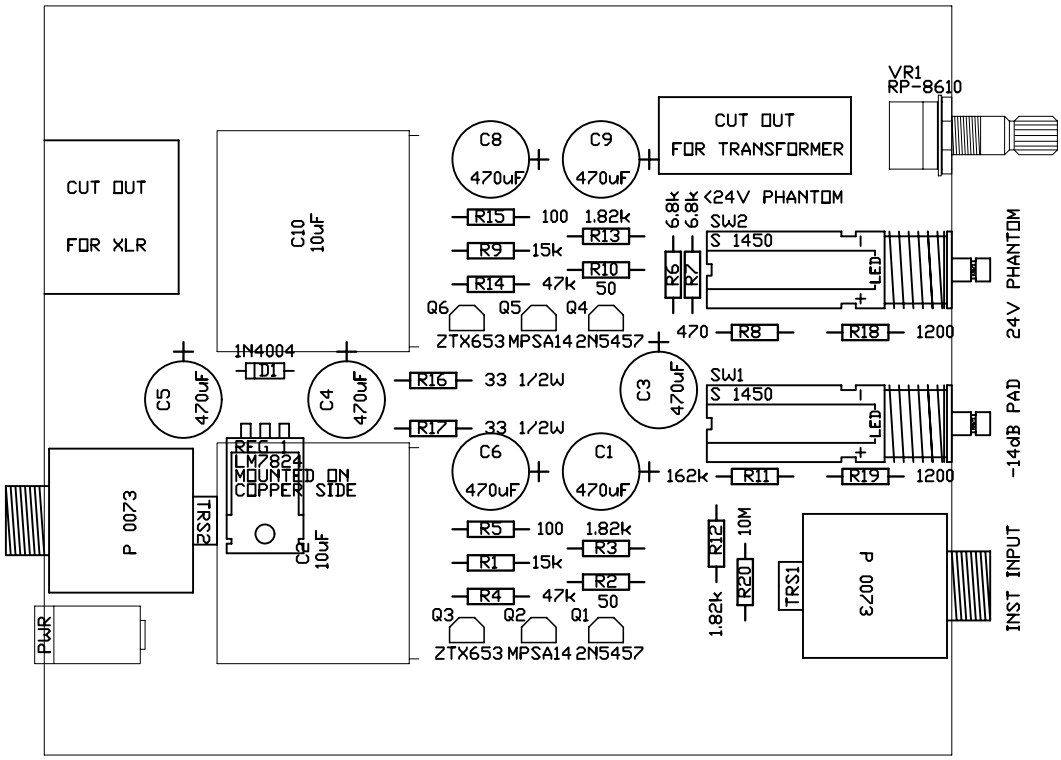
CUT OUT
FOR XLR
C10
10uF
C8
470uF
C9
470uF
CUT OUT
FOR TRANSFORMER
VR1
RP-8610
R15 100
R9 15k
R14 47k
R13 1.82k
R10 50
Q6 Q5 Q4
ZTX653 MPSA14 2N5457
6.8k
6.8k
R6
R7
<24V PHANTOM
SW2
S 1450
LED
470 R8
R18 1200
24V PHANTOM
1N4004
D1
C5
470uF
C4
470uF
R16 33 1/2W
R17 33 1/2W
C3
470uF
SW1
S 1450
LED
REG 1
LM7824
MOUNTED ON
COPPER SIDE
C6
470uF
C1
470uF
162k R11
R19 1200
-14dB PAD
P 0073
TRS2
C2
10uF
R5 100
R1 15k
R4 47k
R3 1.82k
R2 50
Q3 Q2 Q1
ZTX653 MPSA14 2N5457
R12 10M
1.82k
R20
TRS1
P 0073
INST INPUT
PWR

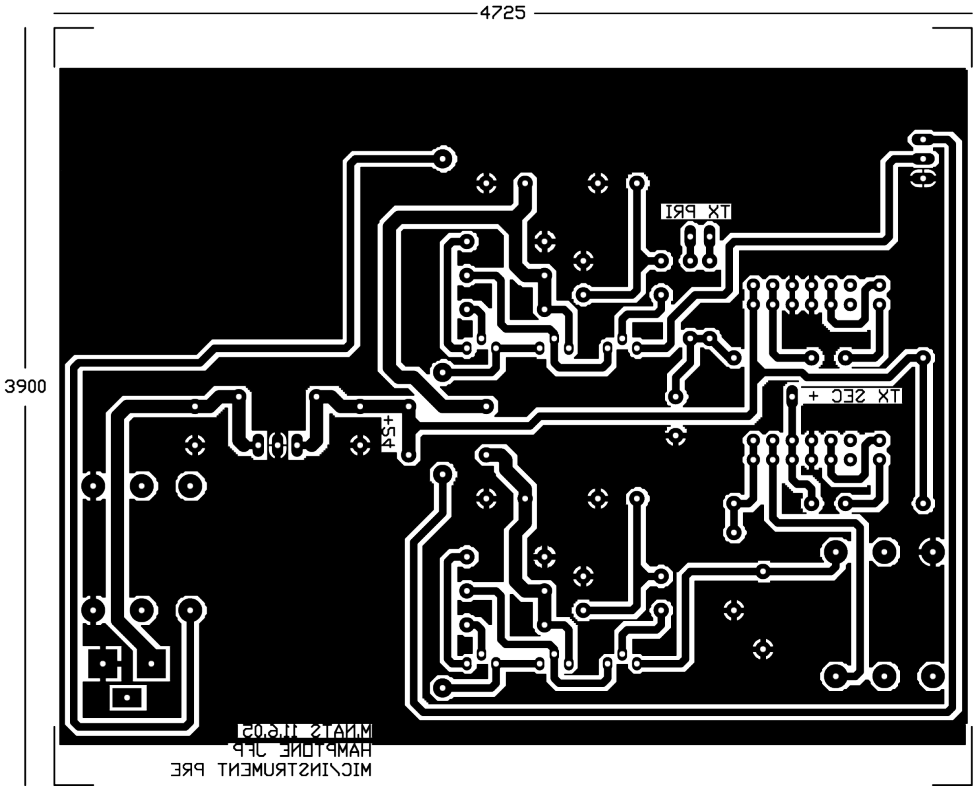
4725
3900
TX PRI
TX SEC +
MIC/INSTRUMENT PRE
HAMPTONE JFP
MINAIS JLE03